AKUSTICA

Chips That Can Hear, Speak, and Sense the World Around Them

PRODUCT BRIEF >

AKU1126

Analog Microphone With Selectable Gain

GENERAL DESCRIPTION

The **AKU1126** is the world's smallest, analog-output microphone that uses standard CMOS semiconductor packaging technology and materials and has user selectable gain from 0 to 12dB. While other microphones degrade in performance as they shrink in size, the **AKU1126** maintains superior performance in an ultra-small, 2mm x 2mm form factor. The **AKU1126** is the first microphone product to leverage Akustica's 1mm x 1mm CMOS MEMS microphone die – a monolithic solution which integrates the acoustic transducer and accompanying electronics in a single chip of silicon. In contrast to other silicon microphones, Akustica's one die approach eliminates the need for inter-die wirebonds, allowing for smaller, higher performance, more reliable products.

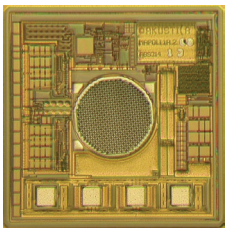

AKU1126 CMOS MEMS 1mm x 1mm Microphone Die

AKU1126 microphones are simple to integrate into many consumer electronic devices with just minimal design changes. In addition, two or more **AKU1126** microphones can be used without increasing the PCB footprint dedicated to a single microphone used today. This makes the **AKU1126** ideal for use in very small end-user devices such as mobile phones and headsets where board space is at a premium and a high degree of voice quality can be achieved using microphone arrays and next generation noise suppression technology.

Additionally, up to 12dB of gain can be added to the **AKU1126** microphone sensitivity by using just one external resistor. The gain select feature provides a new level of flexbility as it allows the same microphone to be used for both near and far-field applications. For higher gain applications, applying the gain directly at the microphone, instead of in downstream electronics, will provide the solution with the lowest overall system noise.

BENEFITS OF THE AKU1126

- Miniature 2mm x 2mm x 1.25mm package size
- Up to 12dB of selectable gain
- As much as 75% smaller than the footprint of alternative microphones
- 70% lower current consumption than traditional electret microphones
- 50% better THD performance at 115dB SPL than other microphones
- Lead-free surface-mountable for improved manufacturing reliability and efficiency
- Automated pick and place compatible
- RoHS compliant and halogen free

FUNCTIONAL BLOCK DIAGRAM

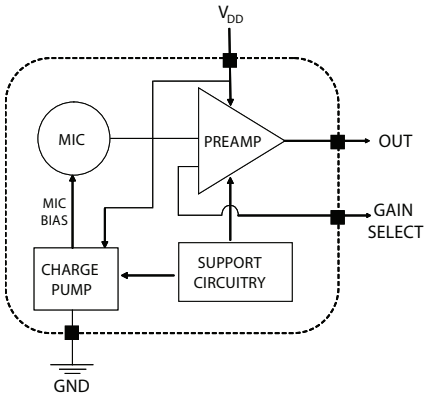

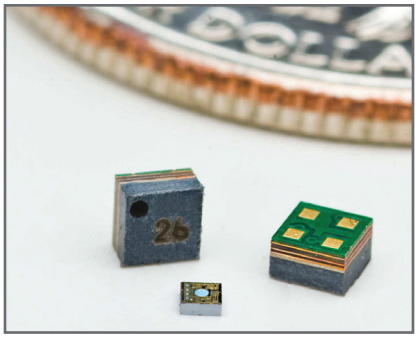

Key Features

- Tiny footprint of only 4mm^2
- High performance, omni-directional analog-output microphone
- Monolithic CMOS MEMS microphone chip
- 57 dB SNR
- -33 to -45 dBV sensitivity
- 1.65V-3.6V operation
- 140 µA current consumption
- <5% distortion at 115dB SPL
- Better than 45dB power supply rejection ratio (PSRR)
- Highly matched microphones in frequency and phase response

Applications

- Small, thin-profile cell phones and other portable devices
- Wireless headsets and other space-constrained audio accessories
- Portable consumer electronic devices which use more than one microphone

Akustica, Inc.
2835 East Carson Street, Suite 301
Pittsburgh, PA 15203 USA
ph: (412) 390-1730 fx: (412) 390-1737

www.akustica.com
sales: sales@akustica.com